Shahrood University of Technology
Iranian Society of Mining Engineering (IRSME)
Journal of Mining and Environment (JME)
journal homepage: www.jme.shahroodut.ac.ir
THOMSON REUTERS
Vol. 10, No. 4, 2019, 947-966.
DOI: 10.22044/jme.2019.8440.1722

Application of cut set method to reliability evaluation of mine ventilation networks

Z. Rezaei, M. Ataee-pour* and H. Madani

Department of Mining and Metallurgy Engineering, Amirkabir University of Technology (Tehran Polytechnic), Tehran, Iran

Received 15 May 2019; received in revised form 10 August 2019; accepted 11 August 2019

Keywords

Reliability

Coal Mine

Ventilation

Cut Set

Network

Abstract

Providing a fresh and cool airflow in underground mines is one of the main concerns during mining. Destruction of support systems, the presence of undesirable objects in the airway and distortion of airflow are the parameters involved that would result in pressure loss, which would affect the ventilation network. There are a lot of research works about the ventilation network planning that consider the confidence in the planning but how reliable are these designs? These questions can be answered using the quantitative reliability evaluation. For the reliability evaluation of mine ventilation network, tunnel resistance and flow rate changes for all branches are considered as the reliability indices and criteria. This paper describes a stepwise method for evaluation of the underground coal mine network reliability associated with major losses using the cut set method. The reliability of the entire network is achieved by the reliability of every single component. The proposed model is implemented by the Takht coal mine. The Takht mine ventilation network probability of failure is in the range of 19-100% so reliability is in the range of 0-81% for the entire ventilation network.

1. Introduction

Underground coal mining operations have caused operation face fatality and financial disasters. Identifying, evaluating, and managing these disasters are considered by anyone involved in mining. The security of health and safety of the personnel working in underground coal mines has been studied using some risk management approaches, which could provide the right balance between different components such as safety, costs rock burst damage, coal self-heating, and roof fall rate in coal mines [1-8]. The stopping of the ventilation network is one of the numerous parameters involved that has been managed for the risk assessment in underground mining. Despite the importance of the ventilation systems in the safety of underground coal mines, insufficient research works have been done directly on the safety of ventilation network [1, 9-11].

Economic and safety concerns in mines involve the fact that the ventilation networks should provide sufficient air in an effective, reliable, and safe manner to design or evaluate ventilation networks in order to achieve the devised purposes. An acceptable definition of reliability, which has been frequently used, can be defined as the ability of a system to perform an application allocated to that system during a pre-determined period or a cycle. This ability can be stated probabilistically or deterministically [12-14]. The concept of probability and assessing adequate performance are the classical indices and criteria to access the reliability.

The specific definition of reliability indices and criteria are required to introduce a network with a proper performance. In some studies, the stability of the ventilation system of coal mines has been obtained as a safety criterion [15] but the development of mine works has been ignored.

Corresponding author: map60@aut.ac.ir (M. Ataee-pour).

There is no determined approach to analyze the efficiency of Mine Ventilation Network (MVN). It seems that the calculation of network component reliability and then estimation of network reliability is the best measure to achieve this aim. The Bolin's algebra is used to analyze the reliability of the entire complex coal MVN, assuming that the reliability of each component is specified [16]. The Bolin's algebra does not take into account the true values of the reliability of each component, and thus the actual association of the components is ignored. The reliability of each branch and network should be defined in the first step.

The relationship between airflow rate and network resistance can be used for the evaluation of reliability in coal MVN. For example, collapsing in a support system or location of objects in airway reduces the flow rate that the prediction of the time and place of their occurrence is not possible. In order to cover this uncertainty, the simulation process was used in this work. The probability distribution of the volume flow rate is used for the reliability evaluation of each branch. Reliability of the underground coal mines was measurable using the procedural framework, which was presented in this work, and was constructed in a step view format. The component with a higher risk was detected through using the repetition of each component in cut sets.

2. Methodology

A reliable ventilation system in underground coal mines is one of the most vital and costly parts of the extraction process. A flow-based performance function is selected for introducing and evaluating the MVN reliability *F(Q)*. There are several ways to evaluate the reliability assessment process according to the definitions and concepts of reliability. However, most of the structures contain four key elements of planning, namely probability, adequate performance, time, and operating conditions [14]. For this purpose, the probable factors that change the flow rate are identified and modeled. The reliability of the entire network is evaluated through the reliability of each component of the network.

The reliability management procedure used in this research work involved a seven-step framework, constructed in Figure 1. The proposed diagram contains the following steps : Step 1: Drawing the MVN graph; Step 2: Developing the weighted MVN graphs; Step 3: Simulation of the obstacle in each branch of the MVN graph; Step 4: Reliability evaluation of each branch of the MVN graph; Step 5: Drawing a reliability ventilation network block diagram; Step 6: Selection of the reliability evaluation method for the whole network, and Step 7: Reliability assessment of the whole mine network. Each component of the framework requires a different type of evaluation and assessment.

In this section, the proposed model is explained using a simple example, shown in Figure 2, in which *A* and *B* are the entry and output points of air, respectively.

Step 1. Draw the MVN graph

Step 2. Develop the weighted MVN graphs

a. Show new mine ventilation layout using re-planning

Step 3. Simulate the obstacle in each branch of the ventilation graph

Step 4. Evaluate the reliability of each branch of ventilation

a. Introduce the reliability indices and criteria of MVN

b. Select the reliability evaluation method for each edge

Step 5. Draw a reliability MVN block diagram

Step 6. Select the reliability evaluation method for MVN

Step 7. Evaluate the reliability of MVN

Figure 1. Step view diagram proposed for reliability evaluation of MNV.

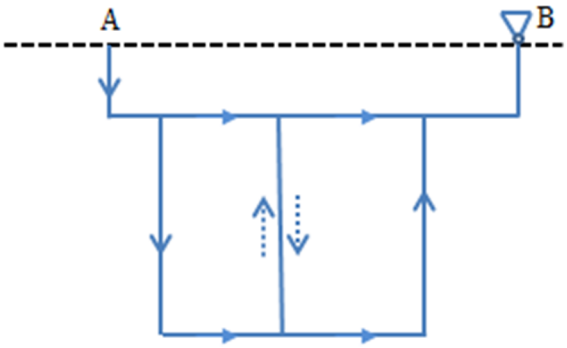

Figure 2. A hypothetical mine ventilation network.

2.1. Step 1. Draw MVN

An MVN is a closed and inter-connected structure of branches through which airflows consisting of several mining works are connected at different points. In fact, an MVN is composed of mine different airways and their associated information. A diagrammatical MVN is a simplification of the actual ventilation circuit. A set of branches and nodes is called a linear graph.

A graphic model of the network is essential for the reliability analysis. The following assumptions are considered in order to obtain the graph design of the ventilation networks:

- Extruded, gob or backfilling spaces is not required to be ventilated so they are removed from the mining graphic network.
- Roadways or branches are named paths, which are shown by lines. These lines are connected together, and their connection points are called nodes or junctions.
- The connection between two adjacent nodes is shown on one vertex, representing a specific mine work such as stope and ventilation raise.

The graph of a hypothetical MVN (Figure 2) is shown in Figure 3.

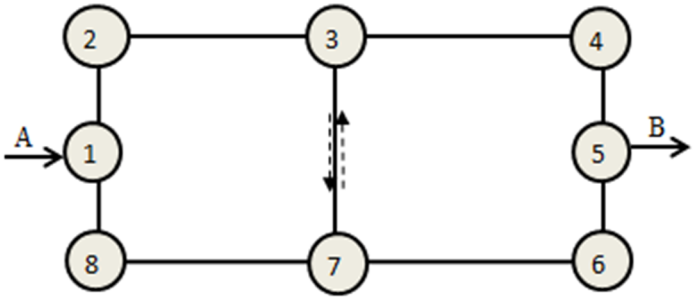

Figure 3. Graph of a hypothetical mine ventilation network.

2.2. Step 2. Develop weighted MVN graphs

An undirected graph consists of a set of vertices and branches. In a simple graph, the vertices are shown with $V(G)=\{v_1,\ldots,v_n\}$ and the branch sets are shown with $E(G)=\{e_1,\ldots,e_m\}$; each branch is an irregular pair of vertices . If $(u \ \& \ v) \in E\ (G)$, then u and v are adjacent, which is shown as $u \leftrightarrow v$ (i.e. u is adjacent to v).

There are two standard approaches to exhibit the $G = (V, E)$ graph, namely as a set of branches or as a set of adjacent branches. Both of them can be used for directive and indirective graphs. However, the adjacent matrix exhibition may be preferred when the graph is dense [17].

The weighted MVN graphs consist of branch resistance and volume flow rate. Part of the pressure change in the tunnels is due to the elevation change and part of it is due to the head loss associated with frictional effects, given in terms of the friction factor, f. It is not easy to determine the functional dependency of the friction factor on the Reynolds number and relative roughness [18]. The fluid flowing through a fixed volume such as an MVN branch with one inlet and one outlet is specified by the volume flow rate. The volume flow rate (Q) in m^3/s is given by $Q = VA$, where V is the average velocity in m/s and A is the cross-sectional area in m.

In each network branch, one of the two possible air directions might be taken into consideration. It should be noted that the optimal direction of the branch is not necessarily the same as the air ventilation direction. Before network analysis, there is no information available about the real air direction in most of the branches.

The weighted MVN graphs are characterized in terms the resistance due to friction, volume flow rate, and direction of airflow as the direction of the MVN branch.

2.3. Step 3. Simulate obstacle of each branch of ventilation graph

The volume flow rate is affected by the variation in the MVN resistance according to major losses and Equation 1 [18].

$$\Delta P = f(V, D, l, \varepsilon, \mu, \rho) \quad (1)$$

where P is the losses, V is the average velocity, D is the diameter, l is the airway length, ε is the roughness, μ is the viscosity, and ρ is the density. It is clear that p is a function of V, D, and l. On the other hand, most MVN systems consist not only of a straight airway but also additional components such as valves, bends, and tees, which enhance the overall head loss of the system. Such losses are generally called obstacles in the airflow or local resistance, which might be mobile in MVN. Therefore, the pressure loss varies according to the duration and location of the obstacle in the airflow. The simulation process has been used in order to cover this uncertainty.

2.4. Step 4. Evaluate reliability of each branch of ventilation

The reliability of underground MVN can also be analyzed by the similar methods used to determine the reliability of other flow networks. As mentioned earlier, ventilation networks in underground mines may be affected by items such as location of objects in airway or destruction of support systems that would result in a pressure loss and distortion of airflow. By considering the necessity of keeping the network performance at an appropriate level in such conditions, reliability evaluation under uncertainty is essential. In other words, MVN may be exposure to failing and should be redesigned, upgraded, and modified in such a way as to have a proper or at least predictable in the event of failure.

2.4.1. Sub-step 1. Introduce reliability indices and criteria of MVN

The criterion of "adequate performance" is an engineering and managerial concept. Failure system may occur in different ways as follows: a catastrophe or a complete failure to operate or it may be caused by a violation of a required system function; for example, the volume flow rate of a part of MVN may fall below a minimum requirement, although MVN may still be operating. An assessment of an adequate performance is dependent on the engineering design and evaluation. Therefore, models of failure for each component and MVN must be thoroughly investigated.

The required airflow should provide sufficient air to all parts of MVN. There are several standards for measuring and designing air in the mine, which contemplate an average of 10% tolerance for the variation of the calculated flow rate [19-21].

In this work, the minimum tolerance of 5% airflow rate was considered for a more conservative reliability evaluation. The generated airflow should provide enough air for different items, which based on the importance are as what follow.

- Coal gas dilution (class A)

The gas that released from coal seams or the surrounding rocks is called coal gas. Since most of this gas consists of methane, it is often called methane. The coal gas is one of the most dangerous mine gases, and in many cases, it causes mine explosion and fatalities. The most important danger of this gas is explosion because it combines easily and rapidly with oxygen in the nearby heat and produces carbon dioxide and water vapor [22, 23].

According to the above-mentioned fatalities, the required air for ventilation of the coal gas has a great importance. The required air for dilution of this gas is Q_1. Due to its great importance, only very low percentage of its amount can be varied, and if the total airflow that passes through the branch decreases to a specific value (e.g. 5%), the considered branch would fail.

- Blasting gas (class B)

The required airflow in order to dilute the gases from blasting is introduced with Q_2. The allowable range of Q_2 changes, relative to Q_1, is a greater rang. Thus that range with respect to Q_1, has increased by 5%, and Q_2 changes till 10% of the calculated value is permitted.

- Coal powder (class C)

In coal mines, very fine particles of coal are spread into the mine atmosphere, and if there is a flame, these powders firstly flame and produce a very dangerous explosion, which is more dangerous them coal gas explosion. The resulting wave is so powerful, and in most cases, this wave results in the displacement of support system; the ventilation doors, such equipment, and the whole mine or a part of it may be ruined. If the coal powder explosion conditions exist, the explosion would occur; its explosion is not instantaneous but

if all conditions exist, it requires several seconds to get started. This delay time decreases as the environmental temperature increases so that when the primary temperature of the flame is 2000 ^{o}C, the explosion would be instantaneous [23, 24].

The required airflow to ventilate coal dust has a secondary importance; in this classification, it is in class C. If we suppose the required airflow for ventilation Q_3, the allowable range for Q_3 changes, relative to Q_1, is a greater range; for example, Q_3 changes to 15% is permitted, while the allowable range for Q_1 changes has been introduced by 5% earlier.

- Breathing (class D)

The required airflow for workers' breathing is introduced by Q_4. The ranges of changes are extended and their value has been increased by 20%.

- Dust (class E)

The air required to eliminate the dust is introduced by Q_5. Since the value is class E, the range of its changes is greater than the previous classes, and is increased by 25%.

- Cooling (class F)

Heat and humidity of mine have a great role in the workers' efficiency. Excessive heat can cause problems such as decreasing productivity and increasing the accident rate. The temperature of mine is an important property of a mine, which has some major sources such as the surrounding rock strata, equipment, number of miners, lamps, groundwater inflows, compress air pipe, explosion, and oxidation of some components of the rocks. Likewise, this temperature is a function of the temperature of surface air. It should be considered that the mentioned sources have a local effect, and the mine atmospheric temperature has slightly affected.

The required airflow to ventilate is defined by Q_6. Since this amount of airflow has no great effect and role and is normally provided by other sources of airflow, it it is located in class E. The range and its changes are so extensive, permitted to 30%. The total classification can be summarized as shown in Table 1.

Table 1. Total classification and allowable limits [22-24].

Type of flow rate	Classes					
	A	B	C	D	E	F
Q_1: Coal gas dilution (class A)	5%Q_1					
Q_2: Blasting gas (class B)		10%Q_2				
Q_3: Coal powder (class C)			15%Q_3			
Q_4: Breathing (class D)				20%Q_4		
Q_5: Dust (class E)					25%Q_5	
Q_6: Cooling (class F)						30%Q_6

2.4.2. Sub-step 2. Select reliability evaluation method for each branch

Disaster or a complete failure to operate or contraventions of a required system function were introduced as the definitions of systems failure. Violation of a required MVN system output could be as the conservative reliability. Eq. 2 and complete failure could be as a high level of reliability of Eq. 3. In order to use this definition for ventilation systems, each branch of an MVN graph was considered as a separate system, and its reliability was calculated. This system becomes larger, and the reliability of each branch is generalized to the entire network.

$$Q_f^{\acute{}Allowable} = \begin{cases} 1 - \int_{Q_{min}^{Allowable}}^{Q_{max}^{Allowable}} f(q)dq & Q_{min}^{Allowable} < Q_i < Q_{max}^{Allowable} \\ \cdot & otherwise \end{cases} \quad (2)$$

$$Q_f^{\acute{}Crritical} = \begin{cases} 1 - \int_{Q_{min}^{Critical}}^{Q_{max}^{Critical}} f(q)dq & Q_{min}^{Critical} < Q_i < Q_{max}^{Critical} \\ \cdot & otherwise \end{cases} \quad (3)$$

where $Q_f^{\acute{Allowable}}$ is the probability of contraventions of a required system function, $Q_{max}^{Allowable}$ is the maximum allowed volume flow rate, $Q_{min}^{Allowable}$ is the minimum allowed volume flow rate, $Q_f^{\acute{Crritical}}$ is the probability of complete failure, $Q_{max}^{Critical}$ is the maximum critical volume flow rate, and $Q_{min}^{Critical}$ is the minimum critical volume flow rate.

2.5. Step 5. Draw a reliability MVN block diagram

It is crucial that the connection between the system and its graph model be thoroughly understood before considering the analytical techniques that can be used to evaluate the reliability of this MVN. For this purpose, a reliability network is often referred to as a reliability block diagram. The block diagram of a hypothetical MVN is shown in Figure 4.

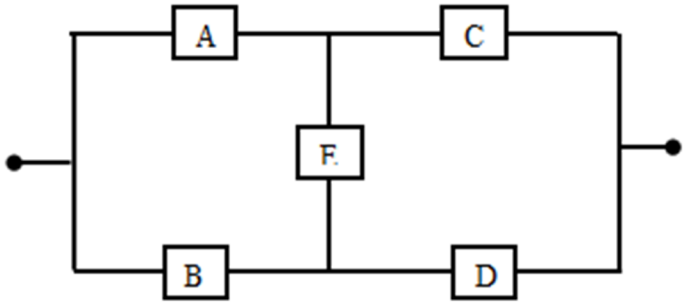

Figure 4. Block diagram of mine diagonal connection network.

2.6. Step 6. Select reliability evaluation method for MVN

In this work, the cut set method was employed for MVN reliability evaluation for two reasons; the cut set method can be programmed in a complicated network and directly introduced paths leading to system failures distinctly. "*A cut set is a set of system components, which, when failed, causes* the *failure of the system*" [25]. In order to use the cut set method, at first, it is essential to identify the minimal subsets. "*A minimal cut set is a set of system component, which, when failed, causes the system but when any one component of the set has not failed, does not cause system failure*" [14]. Using this definition, the minimal cut sets of block diagram of mine diagonal connection network (Figure 4) are *AB*, *CD*, *AED,* and *BEC*.

2.7. Step 7. Evaluate reliability of MVN

Combinations of minimal cut-offs of block diagram of mine diagonal connection network are used for the reliability evaluation. According to the definitions of cut sets, the components of the cut set are connected in parallel, and each cut set is in series with all the other cut sets, as shown in Figure 5.

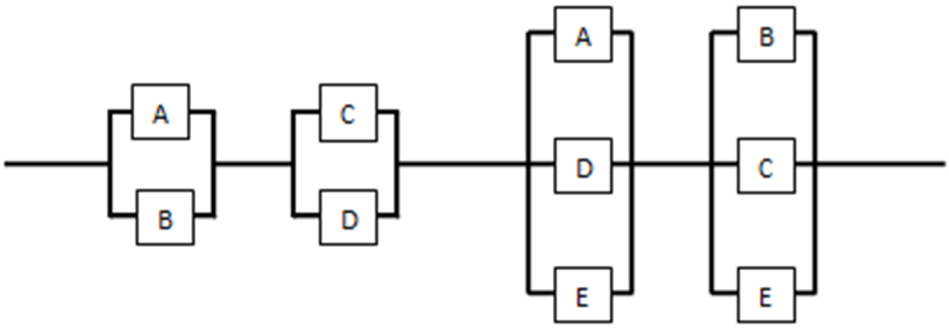

Figure 5. Minimal cut sets of mine diagonal connection network.

If C_i represents the cut set i, $P(C_i)$ probability of cut set failure, and $Q_i^{\acute{}}$ probability of failure of component *I;* therefore, the unreliability of the mine diagonal connection network is given by Equation 4 [13, 14].

For example, $P(C_6)$ is the probability of the sixth cut set failure, which contains the probability of failure of component *B,C, and E.*

$$\begin{aligned} Q_s' &= P(C_1 \cup C_2 \cup C_3 \cup C_4) \\ &= P(C_1) + P(C_2) + P(C_3) + P(C_4) - P(C_1 \cap C_2) - P(C_1 \cap C_3) - P(C_1 \cap C_4) - P(C_2 \cap C_4) \\ &\quad - P(C_2 \cap C_3) - P(C_3 \cap C_4) + P(C_1 \cap C_2 \cap C_3) + P(C_1 \cap C_2 \cap C_4) \\ &\quad + P(C_1 \cap C_2 \cap C_4) + P(C_1 \cap C_3 \cap C_4) + P(C_2 \cap C_3 \cap C_4) - P(C_1 \cap C_2 \cap C_3 \cap C_4) \end{aligned} \tag{4}$$

where:

$P(C_1) = Q_A' \cdot Q_B'$

$P(C_2) = Q_C' \cdot Q_D'$

$P(C_5) = Q_A' \cdot Q_D' \cdot Q_E'$

$P(C_6) = Q_B' \cdot Q_C' \cdot Q_E'$

$P(C_1 \cap C_2) = P(C_1).P(C_2) = Q_A' \cdot Q_B' . Q_C' \cdot Q_D'$

$P(C_1 \cap C_3) = P(C_1).P(C_3) = Q_A' \cdot Q_B' . Q_D' \cdot Q_E'$

$P(C_1 \cap C_4) = P(C_1).P(C_4) = Q_A' \cdot Q_B' . Q_C' \cdot Q_E'$

$P(C_2 \cap C_3) = P(C_2).P(C_3) = Q_A' \cdot Q_C' . Q_D' \cdot Q_E'$

$P(C_2 \cap C_4) = P(C_2).P(C_4) = Q_B' \cdot Q_C' . Q_D' \cdot Q_E'$

$P(C_3 \cap C_4) = P(C_3).P(C_4) = Q_A' \cdot Q_B' . Q_C' \cdot Q_D' \cdot Q_E'$

$P(C_1 \cap C_2 \cap C_3) = P(C_1 \cap C_2 \cap C_4) = P(C_1 \cap C_2 \cap C_4) = P(C_1 \cap C_3 \cap C_4) = P(C_2 \cap C_3 \cap C_4) = P(C_1 \cap C_2 \cap C_3 \cap C_4) = Q_A' \cdot Q_B' . Q_C' \cdot Q_D' \cdot Q_E'$

Therefore:

$Q_s' = Q_A' \cdot Q_B' + Q_C' \cdot Q_D' + Q_A' \cdot Q_D' \cdot Q_E' + Q_B' \cdot Q_C' \cdot Q_E' - Q_A' \cdot Q_B' . Q_C' \cdot Q_D' - Q_A' \cdot Q_B' . Q_D' \cdot Q_E' - Q_A' \cdot Q_B' . Q_C' \cdot Q_E' - Q_A' \cdot Q_C' . Q_D' \cdot Q_E' - Q_B' \cdot Q_C' . Q_D' \cdot Q_E' + 2Q_A' \cdot Q_B' . Q_C' \cdot Q_D' \cdot Q_E'$

If it is assumed that the probability of the entire component is equal to Q', then:

$Q_s' = 2Q'^2 + 2Q'^3 - 5Q'^4 + 2Q'^5$

3. Application of proposed methodology

3.1. Case study: Takht coal mine

The coal region of eastern Alborz located in the north of Iran is a significant deposit of coal. The area extends from the east of $54^\circ 25' 18$ to $55^\circ 26' 41$ longitudes and the north of $36^\circ 24' 22$ to $37^\circ 8' 48$ latitudes at 900 to 2200 m above the sea level. There are several coal seams in this region, few of which are currently being extracted by underground mining such as Tazareh, Razi and Thakht. In this research work, the Takht coal mine was selected for the case study. The annual production capacity of the Takht mine is 50,000 tons. The specifications of different coal seams of the Takht mine are shown in Table 2.

Four main tunnels coded with numbers, respectively, have been constructed in order to have access to seam 19 of the Takht coal mine. The distance between the tunnels is approximately 80 m. The sub-level stopping method was used for mining. Chain conveyors and rails and wagons were used for haulage in the stopes and main tunnels, respectively. The wooden and steel sets were employed in the stopes and main tunnels. The coal production of the line is 5,000 tons per month, and compressed air hammer is used in stopes.

3.2. Mine ventilation network graph

The Takht network plan is shown in Figure 6, and by considering the assumptions mentioned in Section 2-1, the graph design of the Takht MVN is shown in Figure 7.

The Takht mine graph was prepared using the mine plan (Figure 6), and the branches and vertexes of the Takht MVN graph are shown in Figure 7 and Table 3, respectively.

Table 2. Specifications of Takht coal mine seams [26].

No. of coal seams	Coal seam thickness (m)	Slope of the coal seams (degree)	Reserve (tons)
8	0.52 to 1.5	25 to 30	6
10	0.9 to 2.38	25 to 30	9
11	0.82 to 1.43	17 to 35	10
17	0.79 to 1.07	25 to 35	6
19	0.9 to 2.29	27 to 35	9
20	0.48 to 0.61	26 to 32	4

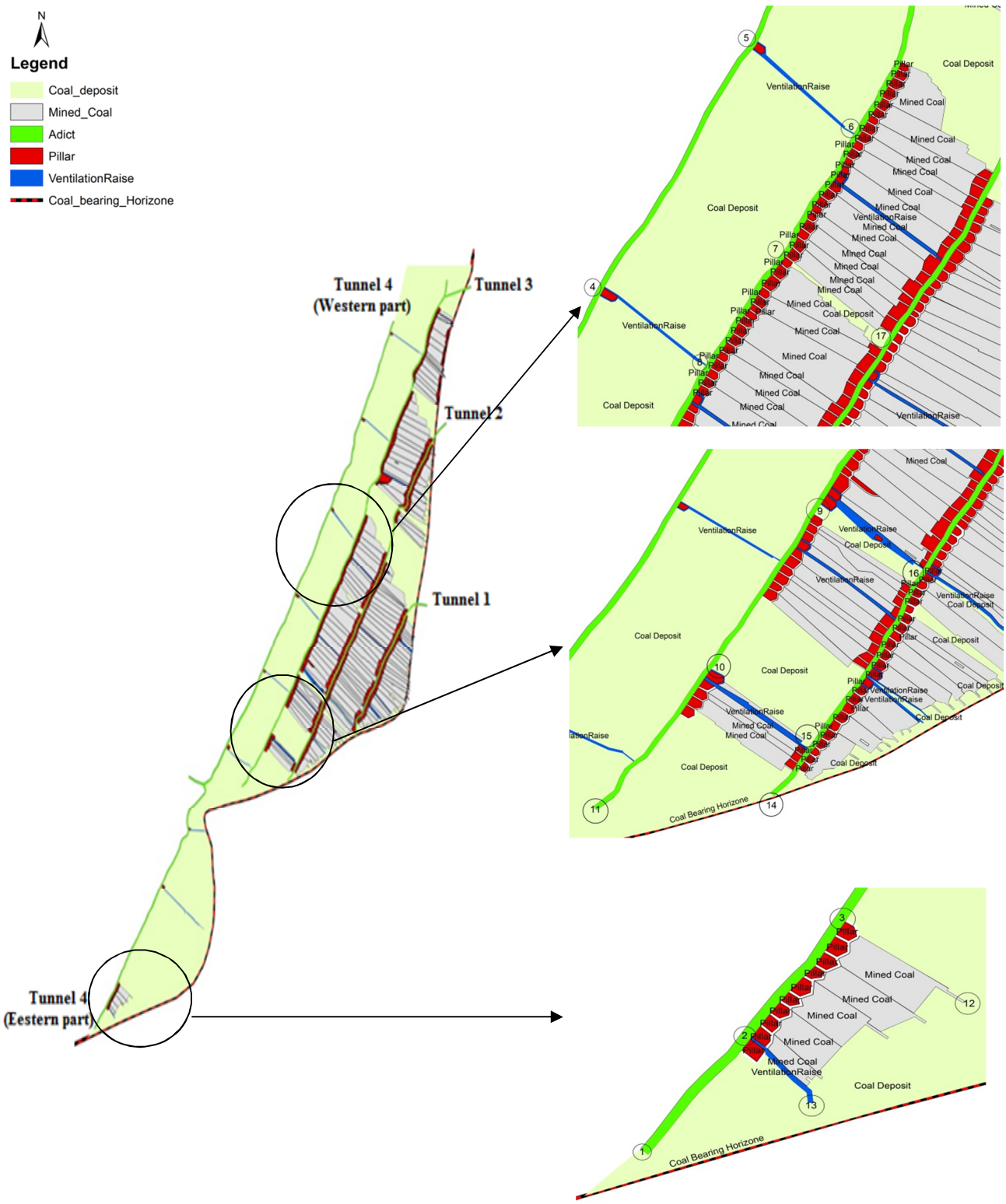

Figure 6. Takht coal mine plan [26].

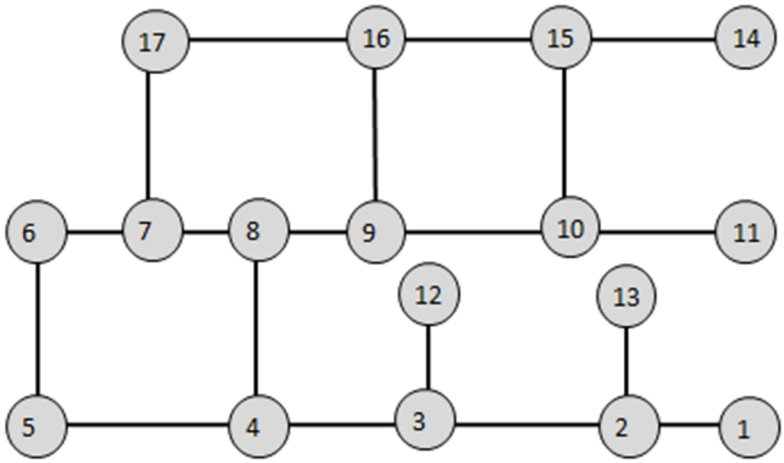

Figure 7. Takht MVN graph.

Table 3. Branches and vertexes of Takht MVN graph.

Initial node	End node	Type of mine work
11	10	Tunnel
2	13	Stope 1
7	17	Stope 4
9	16	Stope 5
10	15	Stope 6
3	12	Stope 2
10	9	Tunnel
9	8	Tunnel
8	7	Tunnel
8	4	Stope 3
7	6	Tunnel
6	5	Ventilation raise
5	4	Tunnel
4	3	Tunnel
3	2	Tunnel
2	1	Tunnel
17	16	Tunnel
16	15	Tunnel
15	14	Tunnel

3.3. Weighted Takht MVN graphs

The weighted Takht mine MVN graph was developed by the length of airway (m), cross-section (m^2), and perimeter (m). The Friction factors of different parts of the Takht coal mine were obtained to calculate the resistance and volume flow rate according to Eq. 1; the details are given below.

3.3.1. Resistance assessment of Takht MVN

Resistance is one of the two major non-vector quantities in the MVN graph, mainly occurring due to friction, obstacles in the airflow, and local resistance. The frictional resistance depends on the geometric properties and type of the support system used in the mine work. MVN may also be affected by the parameters such as locating undesirable objects in the airway or destruction of the support systems, which would result in a change of pressure and distortion of the airflow that is known as the obstacle resistance.

Changing the direction or dimension of airways reduces the useful energy of the air. This type of resistance is known as the local resistance.

The friction resistance of the Takht MVN was calculated using Eq. 5 [18].

$$R = \alpha \frac{LP}{S^3} \tag{5}$$

where α is the friction factor, L is the length, P is the perimeter and, and S is the cross-section of airways. The α values for different parts of the mine are given in Table 4.

The length, perimeter, and cross-section of different excavations of the Takht mine graph are given in Table 5 as well as their corresponding friction factor and friction resistance value.

Table 4. Friction factor (α) for different parts of Takht coal mine [26].

Mine work	α
Coal adict	0.0019
Ventilation raise	0.003
Stope	0.0045

Table 5. Dimensional characteristics and friction resistance of different excavations of Takht MVN.

Initial node	Final node	Length (m)	Cross-section (m^2)	Perimeter (m)	Friction factor	Friction resistance (Morg)
11	10	83	6.00	9.35	0.0019	6.83
2	13	83	3.82	8.54	0.0045	56.62
7	17	87	3.82	8.54	0.0045	59.35
9	16	87	3.82	8.54	0.0045	59.35
10	15	87	3.82	8.54	0.0045	59.35
3	12	83	3.82	8.54	0.0045	56.62
10	9	28	6.00	9.35	0.0019	2.30
9	8	39	6.00	9.35	0.0019	3.21
8	7	113	6.00	9.35	0.0019	9.29
8	4	130	3.28	8.54	0.0045	62.97
7	6	39	6.00	9.35	0.0019	3.21
6	5	131	2.2	6.00	0.003	221.45
5	4	152	6.00	9.35	0.0019	12.50
4	3	575	6.00	9.35	0.0019	39.07
3	2	40	6.00	9.35	0.0019	3.29
2	1	47	6.00	9.35	0.0019	3.29
17	16	36	6.00	9.35	0.0019	2.96
16	15	24	6.00	9.35	0.0019	1.97
15	14	18	6.00	9.35	0.0019	1.48

3.3.2. Volume flow rate calculation

The volume flow rate is another major non-vector quantity in the MVN graph. It includes the volume of air injected for reducing the rate of the blasting gases and coal powder, dilution of methane and coal gas, and the air sufficient for breathing and minimum air velocity (Tables 6 and 7).

Extending the development airways and advancing the working stopes result in new conditions, which require new planning to show the new mine ventilation layout. The new volume flow rates for development tunnels and working stopes of the Takht coal mine were calculated using the Hardy cross-method and the results obtained were tabulated in Table 8.

Table 6. Volume flowrate of preparation tunnels of Takht coal mine.

Description	Excavated Cross section (m^2)	Supported cross-section (m^2)	Methane (m^3/min)	volume flowrate (m^3/min)				Minimum volume flowrate (m^3/min)	Safety factor	volume flowrate (m^3/min)	volume flowrate (m^3/s)
				Air for rate reduction of explosion gases	Methane dilution	Required air for breathing	Minimum permissible air velocity				
Tunnel 4 (western part)	8.20	6.00	0.07	180.56	34.11	36.00	90.00	180.56	1.2	216.67	3.61
Tunnel 4 (eastern part)	8.20	6.00	0.07	180.56	34.11	36.00	90.00	180.56	1.2	216.67	3.61
Tunnel 3	8.20	6.00	0.08	180.56	42.49	36.00	90.00	180.56	1.2	216.67	3.61
Tunnel 2	13.00	9.80	0.00	152.13	0.00	48.00	147.00	152.13	1.2	182.56	3.04
Tunnel 1	10.80	8.00	0.00	379.17	0.00	48.00	120.00	379.17	1.2	455	7.58

Table 7. Volume flowrate of stopes Takht coal mine.

Description	No. of manpower in stopes	Mineable thickness (m)	Methane (m^3/min)	Uncertainty coefficient coal gas	Methane content in entrance (%)	Methane content in exit (%)	volume flowrate (m^3/min)			Minimum volume flow rate (m^3/min)	Coefficient air leakage	volume flow rate (m^3/min)	Safety factor	volume flow rate (m^3/min)	volume flow rate (m^3/s)
							Methane dilution	Required air for breathing	Minimum permissible air velocity						
Stope (01)	12.00	1.40	0.35	2.05	0.5	1.00	135.99	72.00	189.0	189.00	1.05	198.5	1.2	238.1	3.97
Stope (02)	12.00	0.80	0.47	1.99	0.5	1.00	282.43	72.00	108.0	282.43	1.05	296.6	1.2	355.9	5.93
Stope (03)	12.00	0.50	0.21	2.13	0.5	1.00	85.73	72.00	40.50	85.73	1.05	90.01	1.2	108	1.8
Stope (04)	12.00	1.40	0.57	1.94	0.5	1.00	209.56	72.00	113.4	209.56	1.05	220	1.2	264	4.4
Stope (05)	12.00	1.40	0.30	2.08	0.5	1.00	201.22	72.00	113.4	201.22	1.05	211.3	1.2	253.5	4.23
Stope (06)	12.00	0.80	0.29	2.09	0.5	1.00	185.13	72.00	86.4	185.13	1.05	194.4	1.2	233.3	3.89

Table 8. Volume flowrate for preparation tunnels and working stopes of Takht coal mine.

No. of mine work	Initial node	Final node	Type of mine work	Volume flowrate (m^3/s)
1	11	10	Tunnel	15.26
2	2	13	Stope 1	1.42
3	7	17	Stope 4	3.37
4	9	16	Stope 5	3.02
5	10	15	Stope 6	5.24
6	3	12	Stope 2	2.12
7	10	9	Tunnel	12.17
8	9	8	Tunnel	6.83
9	8	7	Tunnel	1.33
10	8	4	Stope 3	0.45
11	7	6	Tunnel	0.47
12	6	5	Ventilation raise	0.47
13	5	4	Tunnel	0.47
14	4	3	Tunnel	7.11
15	3	2	Tunnel	5.04
16	2	1	Tunnel	4.04
17	17	16	Tunnel	3.37
18	16	15	Tunnel	1.64
19	15	14	Tunnel	5.26

3.4. Resistance variation of each branch of MVN Takht graph

Uncertainty in resistance variation of the MVN Takht mine graph was modeled with any 10% possible resistance variation of each branch. The possible variation in the resistance of the main tunnel, namely tunnel_2, which connects 10 to 11, the node is shown as an example of this modeling approach in Table 9.

According to Eq. 1, each new resistance changes the flow rate of the same branch of the MVN graph, and as a result, the flow rate of all MVN branches changes. New volume flow rates corresponding to changes in the resistance of the branch 1, which connects the node from 10 to 11, are given in Table 10. For each 380 generated resistance value, 380 separate volume flow rates for each branch were calculated using the Hardy cross-method and stored for use in the MVN reliability evaluation.

Table 9. Resistance variation of resistance for the main tunnel, tunnel 2.

Variation	Ascending variations (Morg)	Variation	Descending variations (Morg)
0%	6.826	0%	6.826
+10%	7.5086	-10%	6.1434
+20%	8.1912	-20%	5.4608
+30%	8.8738	-30%	4.7782
+40%	9.5564	-40%	4.0956
+50%	10.239	-50%	3.413
+60%	10.9216	-60%	2.7304
+70%	11.6042	-70%	2.0478
+80%	12.2868	-80%	1.3652
+90%	12.9694	-90%	0.6826
+100%	13.652	-100%	0.006826

Table 10. The corresponding flowrate of all MVN branches according to variation in the resistance for the main tunnel.

No. of excavation	Corresponding flowrate of all MVN branches																			
	Variation in the resistance for the main tunnel No. 1																			
	-100%	-90%	-80%	-70%	-60%	-50%	-40%	-30%	-20%	-10%	10%	20%	30%	40%	50%	60%	70%	80%	90%	100%
1	17.72	17.43	17.13	16.85	16.58	16.33	16.09	15.87	15.65	15.45	15.08	14.90	14.73	14.57	14.42	14.28	14.14	14.00	13.87	13.75
2	1.70	1.67	1.63	1.60	1.57	1.54	1.51	1.49	1.46	1.44	1.40	1.38	1.36	1.35	1.33	1.31	1.30	1.28	1.27	1.26
3	3.24	3.25	3.27	3.28	3.29	3.31	3.32	3.33	3.35	3.36	3.38	3.39	3.39	3.42	3.43	3.44	3.45	3.46	3.47	3.48
4	2.84	2.86	2.88	2.90	2.92	2.93	2.95	2.97	2.99	3.00	3.04	3.05	3.05	3.08	3.10	3.11	3.13	3.14	3.15	3.16
5	3.09	3.35	3.61	3.87	4.10	4.32	4.53	4.72	4.90	5.08	5.40	5.54	5.54	5.82	5.94	6.07	6.18	6.29	6.40	6.50
6	2.69	2.63	2.56	2.50	2.44	2.39	2.34	2.29	2.24	2.20	2.12	2.08	2.06	2.02	1.99	1.96	1.93	1.90	1.88	1.85
7	12.48	12.45	12.42	12.39	12.36	12.32	12.29	12.26	12.23	12.20	12.15	12.12	12.12	12.07	12.04	12.02	11.99	11.97	11.95	11.92
8	6.96	6.95	6.93	6.92	6.91	6.89	6.88	6.87	6.85	6.84	6.82	6.81	6.81	6.78	6.77	6.76	6.75	6.74	6.73	6.72
9	1.46	1.45	1.43	1.42	1.41	1.39	1.38	1.37	1.35	1.34	1.32	1.31	1.31	1.28	1.27	1.26	1.25	1.24	1.23	1.22
10	0.98	0.92	0.85	0.79	0.74	0.68	0.63	0.58	0.54	0.50	0.42	0.38	0.38	0.32	0.29	0.26	0.23	0.21	0.18	0.16
11	0.45	0.44	0.44	0.44	0.44	0.44	0.44	0.44	0.44	0.44	0.44	0.44	0.44	0.43	0.43	0.43	0.43	0.43	0.43	0.43
12	0.45	0.44	0.44	0.44	0.44	0.44	0.44	0.44	0.44	0.44	0.44	0.44	0.44	0.43	0.43	0.43	0.43	0.43	0.43	0.43
13	0.45	0.44	0.44	0.44	0.44	0.44	0.44	0.44	0.44	0.44	0.44	0.44	0.44	0.43	0.43	0.43	0.43	0.43	0.43	0.43
14	7.65	7.58	7.51	7.45	7.39	7.34	7.29	7.24	7.19	7.15	7.07	7.04	7.04	6.97	6.94	6.91	6.88	6.85	6.83	6.80
15	5.32	5.29	5.25	5.22	5.19	5.16	5.14	5.11	5.09	5.06	5.02	5.00	4.99	4.97	4.95	4.94	4.92	4.91	4.89	4.88
16	4.22	4.20	4.18	4.16	4.14	4.12	4.10	4.09	4.07	4.06	4.03	4.02	4.00	3.99	3.98	3.97	3.96	3.95	3.94	3.93
17	3.24	3.25	3.27	3.28	3.29	3.31	3.32	3.33	3.35	3.36	3.38	3.39	3.39	3.42	3.43	3.44	3.45	3.46	3.47	3.48
18	1.98	1.95	1.92	1.89	1.86	1.82	1.79	1.76	1.73	1.70	1.65	1.62	1.62	1.57	1.54	1.52	1.49	1.47	1.45	1.42
19	7.72	7.43	7.13	6.85	6.58	6.33	6.09	5.87	5.65	5.45	5.08	4.90	4.90	4.57	4.42	4.28	4.14	4.00	3.87	3.75

Table 11. Reliability of each Takht MVN branch.

Branch	Type of mine work	Mean	Standard deviation	Critical category of flow of each branch	Allowable category of flow of each branch	$Q_{min}^{Critical}$	$Q_{max}^{Critical}$	$Z_{Q_{min}^{Critical}}$	$Z_{Q_{max}^{Critical}}$	$Q_{min}^{Allowable}$	$Q_{max}^{Allowable}$	$Z_{Q_{min}^{Allowable}}$	$Z_{Q_{max}^{Allowable}}$	$Q_f^{'Allowable}$	$Q_f^{'Crritical}$	$R_f^{lowerbounnd}$	$R_f^{Upperbound}$
1	Tunnel	15.20	0.68	F	E	10.64	19.76	0.00	1.00	11.40	19.00	0.00	1.00	0.00	0.00	1.00	1.00
2	Stope (01)	2.36	0.58	D	A	1.89	2.83	0.21	0.79	2.24	2.47	0.42	0.58	0.84	0.42	0.16	0.58
3	Stope (04)	2.16	1.23	D	A	1.73	2.59	0.36	0.64	2.05	2.26	0.47	0.53	0.93	0.73	0.07	0.27
4	Stope (05)	5.37	1.29	D	A	4.30	6.45	0.20	0.80	5.10	5.64	0.42	0.58	0.84	0.40	0.16	0.60
5	Stope (06)	5.30	0.67	D	A	4.24	6.35	0.06	0.94	5.03	5.56	0.35	0.65	0.69	0.11	0.31	0.89
6	Stope (02)	2.75	0.52	D	A	2.20	3.30	0.14	0.86	2.61	2.88	0.40	0.60	0.79	0.29	0.21	0.71
7	Tunnel	9.71	0.86	E	C	7.28	12.13	0.00	1.00	8.25	11.16	0.04	0.96	0.09	0.00	0.91	1.00
8	Tunnel	6.37	0.83	E	C	4.78	7.96	0.03	0.97	5.41	7.33	0.12	0.88	0.25	0.05	0.75	0.95
9	Tunnel	12.01	4.68	E	C	9.00	15.01	0.26	0.74	10.21	13.81	0.35	0.65	0.70	0.52	0.30	0.48
10	Stope (03)	0.24	0.15	D	A	0.19	0.28	0.37	0.63	0.22	0.25	0.47	0.53	0.94	0.75	0.06	0.25
11	Tunnel	0.77	0.19	E	C	0.58	0.97	0.15	0.85	0.66	0.89	0.27	0.73	0.54	0.30	0.46	0.70
12	Ventilation raise	2.40	0.94	C	B	1.80	3.00	0.26	0.74	2.16	2.64	0.40	0.60	0.80	0.52	0.20	0.48
13	Tunnel	2.56	0.90	E	C	1.92	3.20	0.24	0.76	2.17	2.94	0.34	0.66	0.67	0.48	0.33	0.52
14	Tunnel	5.31	0.78	E	C	3.98	6.63	0.04	0.96	4.51	6.10	0.15	0.85	0.31	0.09	0.69	0.91
15	Tunnel	5.58	0.84	E	C	4.18	6.97	0.05	0.95	4.74	6.41	0.16	0.84	0.32	0.10	0.68	0.90
16	Tunnel	8.19	2.39	E	C	6.14	10.24	0.20	0.80	6.96	9.42	0.30	0.70	0.61	0.39	0.39	0.61
17	Tunnel	9.42	3.30	E	C	7.07	11.78	0.24	0.76	8.01	10.84	0.33	0.67	0.67	0.47	0.33	0.53
18	Tunnel	1.01	1.20	E	C	0.76	1.27	0.42	0.58	0.86	1.16	0.45	0.55	0.90	0.83	0.10	0.17
19	Tunnel	5.23	0.44	E	C	3.92	6.53	0.00	1.00	4.44	6.01	0.04	0.96	0.08	0.00	0.92	1.00

3.5. Reliability evaluation of each Takht MVN branch

380 separate volume flow rates for each Takht MVN branch were calculated using the Hardy cross-method and stored to use in the MVN reliability evaluation (Step 3: Simulation of obstacle in each branch of ventilation graph). The distribution of the volume flow rate of all branches is normal, which has been confirmed with at least one of the Chi-squared and the Kolmogorov-Smirnov (K-S) tests.

After determination of the volume flow rate distribution of each Takht MVN branch, the next step for reliability evaluation introduces the allowable and critical boundaries using the six classes in Section 2.4.1 and Table 1.

In the Takht mine work, branch No. 2 is a stope (Table 8). The allowable and the critical boundary of the flow rate variation are determined by the categories A and D, coal gas dilution (class A), and fresh air for breathing of mine worker in face (class D).

The mean volume flow rate of this stope is $\mu_2 = 2.36$; thus its allowable boundary using flow rate classification (Table 1) is $\mu_2 \pm 5\%\ \mu_2$ and the critical boundary is $\mu_2 \pm 20\%\ \mu_2$. Considering the normal distribution, the probability of occurrence of flows in the allowed range is represented as the lower bound of reliability, and the critical range is represented as the upper bound of reliability (Figure 8).

3.6. Reliability of Takht MVN block diagram

For this purpose, a reliability network is often referred to as a reliability block diagram (Figure 9).

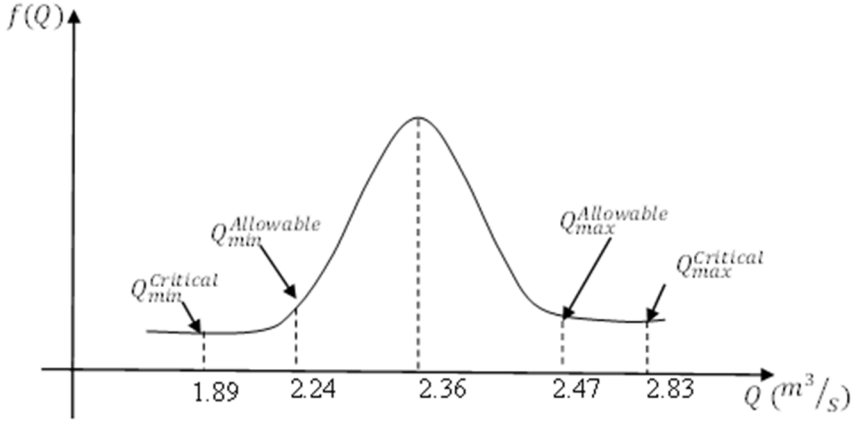

Figure 8. Allowable and critical boundaries of branch No. 2.

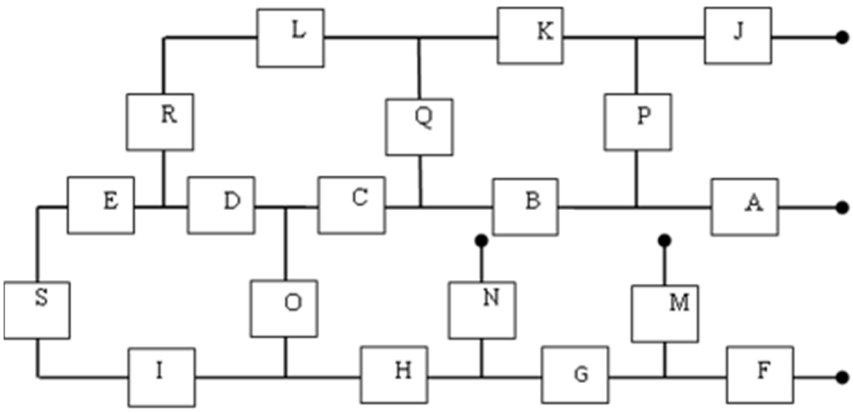

Figure 9. Takht MVN block diagram.

3.7. Cut set method

The cut can be coded using computer programming languages for the fast and efficient evaluation of any general network, and this method is straightly connected to the mode of system failure so the cut set method was selected for the Takht MVN reliability evaluation. A cut set is a set of system components, which when failed, caused failure of the system. The Takht MVN cut sets are identified according to the following steps:

i. Detect all minimal paths

In Figure 10, *A* is the entry point of the air, and *F*, *J*, *M,* and *N* are the outputs. All minimal paths that connect the air entrance to the output (from *A* to *F*, *J*, *M,* and *N*) are identified and are shown below.

APJ, ABQKJ, ABCDRLKJ, ABCDESIHGF, ABCOHGF, ABCOHN, ABCDESIHN, ABCOHGM, ABCDESIHGM

ii. Create an occurrence matrix that detects all components in each path;

The Takht MVN incidence matrix is shown in Table 12.

iii. If all elements of any column of the occurrence matrix are non-zero, the component related to that column establishes a first-order cut;

The first-order cut set of Tatht MVN is *A* (Table 12).

iv. Combine two columns of the occurrence matrix at a time. If all elements of the combined columns are non-zero, the components related to that column establish a second-order cut. Delete any cut including the first-order cut to give the second-order minimal cuts.

The second-order minimal cuts of Tatht MVN are *HJ*, *CJ*, *BP,* and *BJ*.

v. Repeat step (iv) with three columns at a time to give the third-order cuts; this time, delete any cuts including the first- and second-order cut;

The third-order minimal cuts of Tatht MVN are *CKP*, *CQP*, *DJO*, *EJO*, *GJN*, *HKP*, *IJO,* and *JOS*.

vi. Continue until the maximum-order cut has been obtained.

The fourth- and fifth-order minimal cuts of Tatht MVN are *GKNP, GIJQ, DKOP, EKOP, HLPQ, DOPQ, DHPQ, KPOS* , *HPQR, FJMN, IKOP* and *ELOPQ, EOPQR* ,*GLNPQ, ILOPQ, IOPQR, LOPQS, OPQRS* (Table 11).

Table 12. Takht MVN incidence matrix.

Minimal path	A	B	C	D	E	F	G	H	I	J	K	L	M	N	O	P	Q	R	S
APJ	1	0	0	0	0	0	0	0	0	1	0	0	0	0	0	1	0	0	0
ABQKJ	1	1	0	0	0	0	0	0	0	1	1	0	0	0	0	0	1	0	0
ABCDRLKJ	1	1	1	1	0	0	0	0	0	1	1	1	0	0	0	0	0	1	0
ABCDESIHGF	1	1	1	1	1	1	1	1	1	0	0	0	0	0	0	0	0	0	1
ABCOHGF	1	1	1	0	0	1	1	1	0	0	0	0	0	0	1	0	0	0	0
ABCOHN	1	1	1	0	0	0	0	1	0	0	0	0	0	1	1	0	0	0	0
ABCDESIHN	1	1	1	1	1	0	0	1	1	0	0	0	0	1	0	0	0	0	1
ABCOHGM	1	1	1	0	0	0	1	1	0	0	0	0	1	0	1	0	0	0	0

3.8. Reliability of Takht MVN

The minimal cut sets that are identified from the Takht MVN (Section 3.6) must be joining for the MVN reliability evaluation. From the definition of minimal cut sets, if all parts of each cut set fail, then the whole system fails. As a consequence, the parts of the cut set are in effect joined in parallel, and the failure probability of the component in cut set may be combined using the parallel system, and if anyone of the cut sets fails, then the whole MVN system fails; consequently, each cut set is in series with all the other cut sets. The reliability diagram of the minimal cut sets of Takht MVN using the principle mentioned above is shown in Figure 10, and the components of each minimal cut set are mentioned in Table 13. The probability of failure of Takht MVN is given by Equation 6.

$$\acute{Q_s} = P(C_1 \cup C_2 \cup C_3 \cup \ldots \cup C_{31}) \quad (6)$$

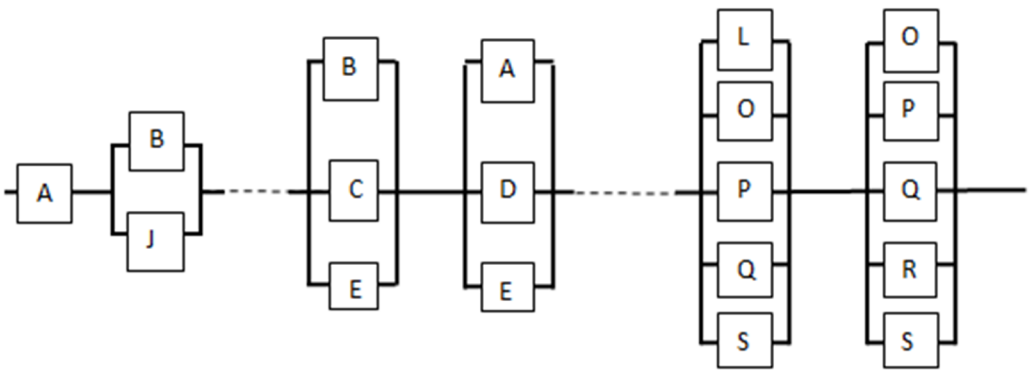

Figure 10. Minimal cut sets of Takht MVN.

$$\acute{Q_s} = P(C_1 \cup C_2 \cup C_3 \cup C_4 \cup \ldots \cup C_{31})$$
$$= P(C_1) + P(C_2) + P(C_3) + P(C_4) + \cdots + P(C_{31}) - P(C_1 \cap C_2) - P(C_1 \cap C_3) - P(C_1 \cap C_4) - P(C_2 \cap C_4) - P(C_2 \cap C_3) - P(C_3 \cap C_4) - \cdots + P(C_1 \cap C_2 \cap C_3) + P(C_1 \cap C_2 \cap C_4) + P(C_1 \cap C_2 \cap C_4) + P(C_1 \cap C_3 \cap C_4) + \cdots + P(C_2 \cap C_3 \cap C_4) - P(C_1 \cap C_2 \cap C_3 \cap C_4) - \cdots$$

where:

$P(C_1) = \acute{Q}_A \cdot$

$P(C_2) = \acute{Q}_J \cdot \acute{Q}_B$

$P(C_3) = \acute{Q}_B \cdot \acute{Q}_P$

$P(C_4) = \acute{Q}_C \cdot \acute{Q}_J$

$P(C_5) = \acute{Q}_H \cdot \acute{Q}_J$

$P(C_6) = \acute{Q}_C \cdot \acute{Q}_K \cdot \acute{Q}_P$

$P(C_7) = \acute{Q}_C \cdot \acute{Q}_Q \cdot \acute{Q}_P$

…

$P(C_2 \cap C_3) = P(C_2).P(C_3) = \acute{Q}_J \cdot \acute{Q}_B . \acute{Q}_B \cdot \acute{Q}_P$

$P(C_2 \cap C_4) = P(C_2).P(C_4) = \acute{Q}_J \cdot \acute{Q}_B . \acute{Q}_C \cdot \acute{Q}_J$

$P(C_2 \cap C_5) = P(C_2).P(C_5) = \acute{Q}_J \cdot \acute{Q}_B . \acute{Q}_H \cdot \acute{Q}_J$

$P(C_3 \cap C_4) = P(C_3).P(C_4) = \acute{Q}_B \cdot \acute{Q}_P . \acute{Q}_C \cdot \acute{Q}_J$

$P(C_3 \cap C_5) = P(C_3).P(C_5) = \acute{Q}_P \cdot \acute{Q}_B . \acute{Q}_H \cdot \acute{Q}_J$

$P(C_4 \cap C_5) = P(C_4).P(C_5) = \acute{Q}_C \cdot \acute{Q}_J . \acute{Q}_H \cdot \acute{Q}_J$

…

Table 13. Minimal cut sets and the reliability of Takht MVN.

Reliability	Unreliability	Cut set component	No. of cut set paths	Reliability	Unreliability	Cut set component	No. of cut set paths
(0.843,0.99)	(0.0026,0.157)	*GKNP*	C_{17}	1	0	*A*	C_1
(0.88,0.99)	(0.0019,0.12)	*HLPQ*	C_{18}	(0.993,1)	(0,0.007)	*BJ*	C_2
(0.8742,0.9828)	(0.0172,0.1258)	*DOPQ*	C_{19}	(0.938,1)	(0,0.062)	*BP*	C_3
(0.8742,0.998)	(0.002,0.1258)	*DHPQ*	C_{20}	(0.98,1)	(0,0.02)	*CJ*	C_4
(0.6848,0.9795)	(0.0205,0.3152)	*KPOS*	C_{21}	(0.975,1)	(0,0.025)	*HJ*	C_5
(0.8329,0.997)	(0.003,0.1671)	*HPQR*	C_{22}	(0.845,0.995)	(0.0045,0.155)	*CKP*	C_6
(0.9676,1)	(0,0.0324)	*FJMN*	C_{23}	(0.855,0.998)	(0.002,0.145)	*CQP*	C_7
(0.6089,0.9952)	(0.033,0.3911)	*IKOP*	C_{24}	(0.947,1)	(0,0.0526)	*DJO*	C_8
(0.8029,0.9952)	(0.0048,0.1971)	*ELOPQ*	C_{25}	(0.96,1)	(0,0.0406)	*EJO*	C_9
(0.7264,0.9018)	(0.0072,0.2736)	*EOPQR*	C_{26}	(0.98,1)	(0,0.0202)	*GJN*	C_{10}
(0.9018,0.9993)	(0.00061,0.0982)	*GLNPQ*	C_{27}	(0.8075,0.9918)	(0.0082,0.1925)	*HKP*	C_{11}
(0.7554,0.9924)	(0.0076,0.2446)	*ILOPQ*	C_{28}	(0.96,1)	(0,0.0406)	*JOS*	C_{12}
(0.6605,0.9884)	(0.0116,0.3395)	*IOPQR*	C_{29}	(0.9496,1)	(0,0.0504)	*IJO*	C_{13}
(0.8029,0.9953)	(0.0047,0.1971)	*LOPQS*	C_{30}	(0.9856,1)	(0,0.0144)	*GIJQ*	C_{14}
(0.7264,0.9928)	(0.0072,0.2736)	*OPQRS*	C_{31}	(0.5914,0.9644)	(0.0356,0.4086)	*DKOP*	C_{15}
				(0.6848,0.9795)	(0.0205,0.3152)	*EKOP*	C_{16}

The unreliability assessment of the system using the cut set method is possible theoretically and exactly but as the system grows up, it becomes very time-consuming. Approximate methods are used in order to solve this problem; this makes the assessment much faster but it also lowers the accuracy. The inaccuracy is usually negligible, and it is in the allowed range of reliability, especially when the reliability of the system members has a big quantity.

An approximate estimate of the probability of failure is the sum up of the minimal cut set probability of unreliability (Equation 7).

$$\acute{Q_s} = P(C_1) + P(C_2) + \ldots + P(C_i) + \ldots + P(C_n) = \sum_{i=1}^{n} P(C_i) \quad (7)$$

Thus using the approximate method, the probability of failure is in the range of 19-100% so the reliability is in the range of 0-81% for the whole Takht MVN.

4. Discussion

The flow rate variation of all branches against the resistance change in component A is introduced by a limited differential gradient. The percentage of the flow rate variation than the normal flow

rate has a limited differential gradient. Changes of resistance at the main tunnel responsible for the transportation of the persons and extracted materials were considered as the inputs of resistance change in component A. The maximum amounts of limited differential gradient are related to the most sensitive branches against the resistant variation in the main tunnel. Those are an air outflow tunnel and a ventilation duct (Figure 11). It seems that the high-sensitivity branches have a higher risk for failure in the ventilation system so the sensitivity of each branch can be considered as a factor in the reliability analysis model.

The results obtained show that the flow rate variations are linear, except for two branches, and it is decreased, as expected, with increase in resistance in 83% of the components. The highest negative slope was related to component J. Variation in flow rate for component J against the resistance change in component A is shown in Figure 12. According to the mine network (Figure 7), this excavation is a branch connecting node 14 to node 15 and is an exhausting tunnel located at + 812 levels. The flow rate of component J was 5.26 m^3/s and was introduced based on the volume flowrate for preparation tunnels and working stopes of the Takht coal mine (Table 8). The main task of component J is exhausting the polluted air from different parts of the mine. Dust dilution (class E) and coal powder (class C) are critical reliability indices and allowable criteria of flow rate for component J so the lower bound and upper bound of reliability for component J is 0.92 and 1, respectively (Table 13). The slope of the changes was sharp but the branch reliable because natural ventilation contributes to the ventilation system due to its different elevation levels.

The magnitude of variation interval is introduced by the variance concept; the greater magnitude of variance of the flow rate variations is related to branches D, F, and L (Table 13). According to the component J, the wide range of variance does not cause the branch to be unreliable so that the reliability of the components D, F, and L is 48%, 53%, and 61%, respectively.

The branches with the least reliability are components O, M, and R (Table 13), all being stopes. Due to the sensitive conditions of the stops, breathing (class D) and coal gas dilution (class A) are critical reliability indices and allowable criteria of flow rate for components O, M, and R so the lower bound and upper bound of reliability for component O are 6% and 25%, respectively, for component M, they are 7% and 27%, and for component R, they are 16% and 58%, respectively (Table 13).

The difference between the high and low levels of Takht MVN reliability was in the magnitude range (Table 13); therefore, it is hard to decide if the entire MVN is reliable or not. Using the improvement approach for reliability will be helpful to solve this kind of problem.

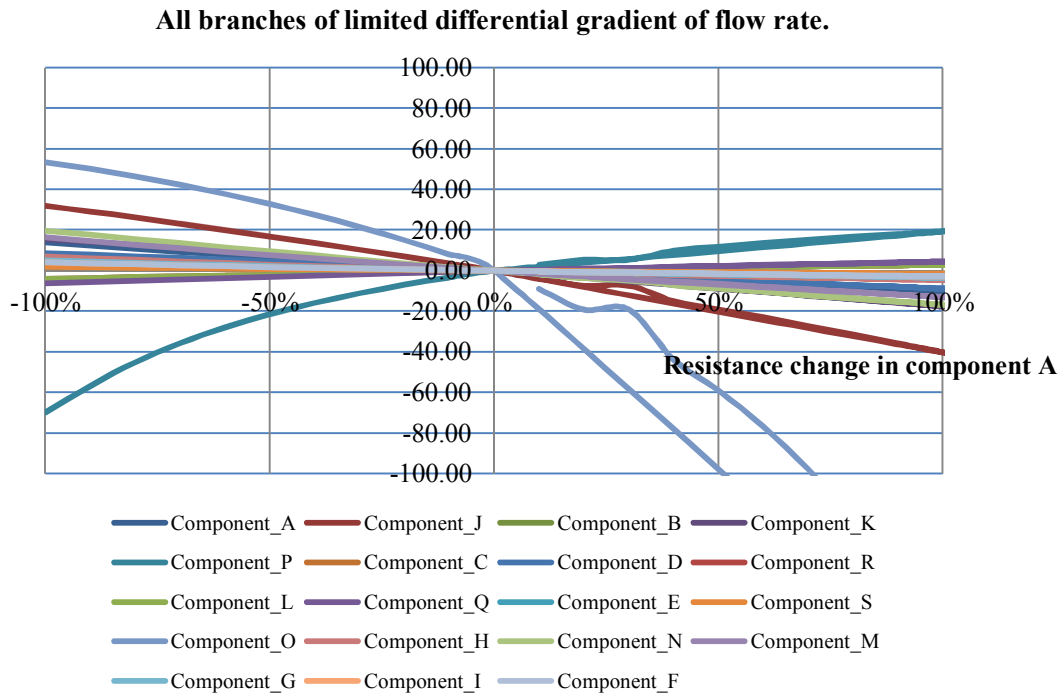

Figure 11. Limited differential gradient of flow rate alteration against variation in resistance of component A for each branch.

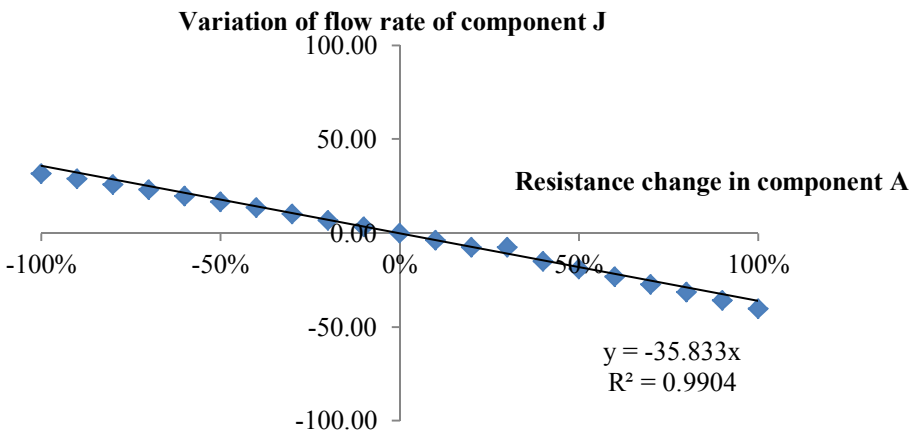

Figure 12. Variation in flow rate of component J against the resistance change in component A.

5. Conclusions

Providing a fresh and cool airflow in underground mines can prevent fatal and financial disasters during the mine life. In this work, the reliability of mine ventilation network (MVN) was identified, evaluated and, managed by considering the relationship between airflow rate and network resistance. For this purpose, MVN was drawn as a graph, and the volume flow rate and resistance were assigned as the weights for the MVN graph. Six reliability indices and criteria were defined, and the reliability of each component was obtained using these definitions. The entire mine ventilation network reliability was obtained with the aid of the cut set method. A reliability evaluation methodology was carried out to provide a general framework to evaluate the probability of failure or reliability of a mine ventilation network in any coal underground mine. In order to perform this model, it was implemented for the Takht coal mine ventilation network. The results obtained showed that the Takht MVN probability of failure was in the range of 0.19-1, and hence, the reliability was in the range of 0-0.81 for the entire ventilation network. The variance was introduced as a wide range of variations of the samples and the samples with more variance appeared to be less reliable, while the branches with a high variance were reliable. The reliability indices and criteria are the significant concepts for the reliability evaluation. According to the results obtained, the stopes (components O, M, and R) have the least reliability, and their sample variances are low.

The Cut set method is one of the network reliability analysis methods. According to the general framework to evaluate the probability of failure or reliability of a mine ventilation network, any of the other methods of network analysis can be used. The difference between the highest and the lowest reliability of the Takht MVN was in the magnitude range, and therefore, it was hard to decide if the entire MVN was reliable or not. Identifying the cut set that has the greatest impact on the reliability evaluation and implementing the improvement approach for reliability will be helpful to solve such kinds of problems in the future works.

References

[1]. Mahdevari, S., Shahriar, K. and Esfahanipour, A. (2014). Human health and safety risks management in underground coal mines using fuzzy TOPSIS. 488: 85-99.

[2]. Badri, A., Nadeau, S. and Gbodossou, A. (2013). A new practical approach to risk management for underground mining project in Quebec. 26 (6): 1145-1158.

[3]. Donbak, L., Rencuzogulları, E., Yavuz, A. and Topaktas, M. (2005). The genotoxic risk of underground coal miners from Turkey. 588 (2): 82-87.

[4]. Saffari, A., Sereshki, F. and Ataei, M. (2019). Evaluation effect of macerals petrographic and pyrite contents on spontaneous coal combustion in Tabas Parvadeh and Eastern Alborz coal mines in Iran. International Journal of Coal Preparation and Utilization. 1-18.

[5]. Ghanbari, K., Ataei, M., Sereshki, F. and Saffari, A. (2018). Determination and assessment of coal bed methane potential using rock engineering systems. Journal of Mining and Environment. 9 (3): 605-621.

[6]. Heal, D., Hudyma, M. and Potvin, Y. (2006). Evaluating rockburst damage potential in underground mining. in Golden Rocks, Proc, The 41st US Symposium on Rock Mechanics (USRMS). American Rock Mechanics Association, Colorado.

[7]. Saffari, A., Sereshki, F., Ataei, M. and Ghanbari, K. (2013). Applying rock engineering systems (RES)

approach to evaluate and classify the coal spontaneous combustion potential in Eastern Alborz coal mines. International Journal of Mining and Geo-Engineering. 47 (2): 115-127.

[8]. Saffari, A., Sereshki, F., Ataei, M. and Ghanbari, K. (2017). Presenting an engineering classification system for coal spontaneous combustion potential. International Journal of Coal Science & Technology. 4 (2): 110-128.

[9]. Cioca, I.L. and Moraru, R.I. (2012). Explosion and/or fire risk assessment methodology: a common approach, structured for underground coalmine environments/Metoda szacowania ryzyka wybuchu i pożarów: podejście ogólne, dostosowane do środowiska kopalni podziemnej. 57 (1): 53-60.

[10]. Duzgun, H. and Einstein, H. (2004). Assessment and management of roof fall risks in underground coal mines. 42 (1): 23-41

[11]. Sereshki, F., Saffari, A. and Elahi, E. (2016). Comparison of Mathematical Approximation Methods for Mine Ventilation Network Analysis. International Journal of Mining Science (IJMS). 2 (1): 1-14.

[12]. Modarres, M., Kaminskiy, M.P. and Krivtsov, V. (2016). Reliability engineering and risk analysis: a practical guide. CRC press.

[13]. Bazovsky, I. (2004). Reliability theory and practice. Courier Corporation.

[14]. Billinton, R. and Allan, R.N. (1992). Reliability evaluation of engineering systems. Springer.

[15]. Cheng, G., Qi, M., Zhang, J., Wang, W. and Cheng, Y.J.P.E. (2012). Analysis of the stability of the ventilation system in baishan coalmine. 45: 311-316.

[16]. Yang, D., Li, J. and Ran, L. (2008). Research on reliability of complex coal mine ventilation networks, Proc, 4th International Conference on Networking and Mobile Computing, IEEE Operations Center, Dalian, China.

[17]. Cormen, T.H., Leiserson, C.E., Rivest, R.L. and Stein, C. (2009). Introduction to algorithms: MIT press, Cambridg, United States. 1180 P.

[18]. Young, D.F., Munson, B.R., Okiishi, T.H. and Huebsch, W.W. (2010). A brief introduction to fluid mechanics: John Wiley & Sons. 528 P.

[19]. Harris, M. (2007). ISO flow measurement standards- report on the ISO/TC 30 meeting in November 2006. 18 (3-4): 114-120.

[20]. Duggan, M. (2017). Standardization in the field of fans used for industrial purposes including the ventilation of buildings and mines. ISO/TC 117, 2017. 1.

[21]. Baas, N. (2017). Natural gas, International Organization for Standardization (ISO), ISO/TC 193, 1.

[22]. Hall, R.A. (2003). Reliability and maintainability models for mobile underground haulage equipment. 96 (1072): 159-165.

[23]. Rezaei, Z., Jalali, S.M.E., Sereshki, F. and Shoumer, Y. (2009). Modeling of the Reliability of Ventilation Networks. 9th International Multidisciplinary Scientific GeoConference SGEM2009. 1: 537-544.

[24]. McPherson, M.J. (2012). Subsurface ventilation and environmental engineering: Springer Science & Business Media, United States. 905 P.

[25]. Birolini, A. (2017). Reliability engineering: theory and practice: Springer. 610 P.

[26]. Dabagh, A., Gharibi, K., Dashti, A. and Mohammadian, S. (2009). Investigating the operation of a natural ventilation system in the Nakhlak lead mine, Iranian Mines and Mining Industries Development and Renovation Organization. 217 P.

تحلیل قابلیت اطمینان شبکه‌های تهویه زیرزمینی با کاربرد روش مجموعه انقطاع

زهره رضائی، مجید عطایی پور* و سید حسن مدنی

دانشکده مهندسی معدن و متالورژی، دانشگاه صنعتی امیرکبیر، ایران

ارسال ۲۰۱۹/۵/۱۵، پذیرش ۲۰۱۹/۸/۱۱

* نویسنده مسئول مکاتبات: map60@aut.ac.ir

چکیده:

تهیه هوای کافی و مناسب در معادن زیرزمینی یکی از دغدغه‌های مهم در طی بهره‌برداری از معدن است. خرابی سیستم‌های نگهداری، قرار گرفتن اجسام پیش‌بینی نشده در مسیر جریان و هر عاملی که سبب افت فشار در مسیر جریان شود، می‌تواند بر راندمان سیستم تهویه اثر گذارد. به دلیل اهمیت مقوله تهویه در بهره‌برداری از معادن زیرزمین تحقیقات گسترده‌ای در زمینه طراحی تهویه و شناسایی پارامترهای مختلف مربوط به طراحی تهویه انجام شده است، اما این طراح‌ها تا چه اندازه قابل اعتماد هستند؟ این سؤال را می‌توان با ارزیابی کمّی قابلیت اطمینان پاسخ گفت. تغییر مقاومت در تونل اصلی معدن و تغییر شدت جریان وابسته به آن به عنوان فاکتور و اندیس قابلیت اطمینان در نظر گرفته شده است. این پژوهش روش گام به گامی برای تحلیل قابلیت اطمینان شبکه‌های تهویه بر اساس تغییرات مقاومت و شدت جریان وابسته به آن با استفاده از روش مجموعه‌های انقطاع ارائه کرده است. قابلیت اطمینان کل شبکه از قابلیت اطمینان هر یک از اجزاء و ارتباط بین آن‌ها محاسبه شده است. روش ارائه شده برای معدن تخت اجرا شد و نتایج نشان دادند که احتمال از کار افتادگی کل شبکه بین ۱۹٪ تا ۱۰۰٪ است؛ به عبارت دیگر قابلیت اطمینان شبکه تهویه معدن تخت بین ۰٪ تا ۸۱٪ خواهد بود.

کلمات کلیدی: قابلیت اطمینان، معدن زغال‌سنگ، تهویه، مجموعه انقطاع، شبکه.